Course and Section_____ Names _____

Date_____ _____

CURRENT-VOLTAGE EXPERIMENT

Introduction

In this experiment we will determine the relationship between the current I and the voltage V in the cases of three electronic devices.

Equipment

DC power supply, two multimeters, one light bulb, one LED (with a 330 Ω resistor mounted), one unknown resistor, one multimeter lead, 4 cables.

Theory

The resistance of a device is defined operationally by the equation by $R = \Delta V/I$. This relationship is called Ohm's Law. However, strictly speaking Ohm's law means that R is constant independent of I and V. For some devices this is true, while for others it is not. In this lab you will measure the I -V curves for three different devices and look at how their resistance varies with ΔV.

Procedure

For each device you will measure I versus V using the circuit below, where R_D is one of the devices.

To measure the <u>voltage</u> (V) across the device, use one of the two multimeters connected it in parallel to the device.

To measure the <u>current</u> *(A)* through the device, use the 'green' multimeter connected in series with the device. Connect the cables to the two inputs in center of the multimeter, as shown in the pics below

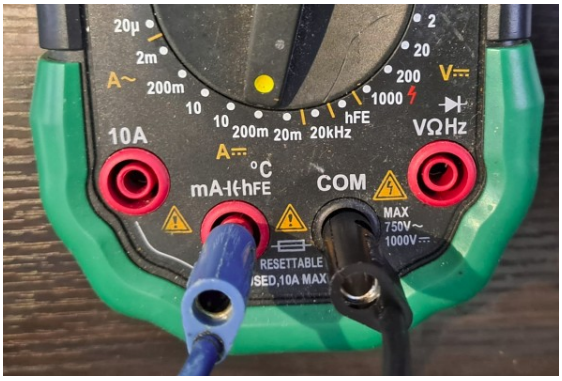

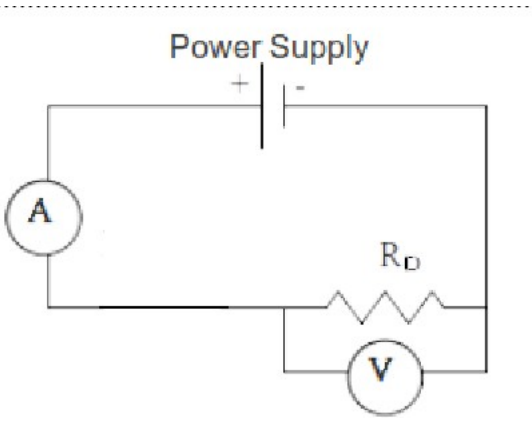

Figure 1

PART 1 - Carbon resistor

Step 1. Set up the circuit show in Figure 1 where for R_D use the carbon resistor with unknown resistance. Connect it to the power supply. Set V = 0 V.

Step 2. Increase the voltage to 2 V and take a measurement of the voltage across the resistor and the current through the resistor. Record your data in the table below

Step 3. Increase the voltage to 4 V and then repeat up to 12 V in step of 2 volts. Take measurements of the voltage and the current each time.

Note: since the resistor is connected directly to the power supply, the output voltage across the resistor should be the same as the output voltage of the power supply V_{PS}. The voltage readout of the power supply is not as precise as the voltage measured by the multimeter.

Analysis

1. Collect your data in the table below

V_{PS}	V (volts)	I (ampere)
2		
4		
6		
8		
10		
12		

2. Plot I versus V (I on the y-axis). Use Excel on our PC for the plot. If you use your laptop then you won't be able to print. Does the plot show that the carbon resistor obey the Ohm Laws? Explain

3. Calculate the resistance of the carbon resistor from the plot

R (calculated)= _____

4. Print and attach a copy of the plot.
5. Remove the resistor form the circuit and measure its resistance directly using the multimeter

R (exact)= _____

6. Calculate the percentage error

% error = (|calculated - exact| / exact) x 100 = _____

PART 2 - Light Emitting Diode (LED)

Step 1. Set up the circuit show in Figure 1 where now for R_D use the LED. The LED has a 330 Ω resistor mounted in series in order to prevent high voltage across it. Set V = 0 V.

Step 2. You want to measure the voltage across the LED only, and not across the series combination of the LED with the 330 Ω resistor (shown inside the circle). Use one of the multimeter lead and be gentle in touching the wire, it might break easily.

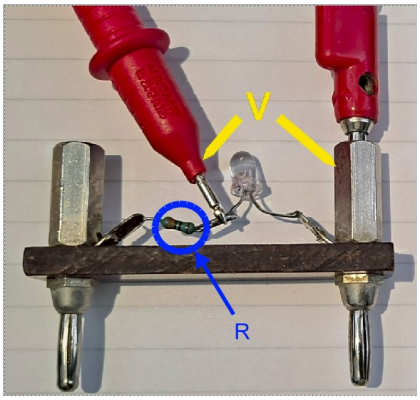

Step 3. Slowly increase the voltage. Take measurements of the voltage and the current each time. Record your data in the table below. If the LED does not light up, reverse the two cables at the power supply. If it won't light up again, check with the TA, the LED might be broken.

Note: take most of the measurements where the curve sharply bends up (at about 2.0V to 2.5 V). The max voltage measured across the LED is about 4.0V.

Analysis

7. Collect your data in the table below

V_{PS}	V (volts)	I (ampere)

Expected plot

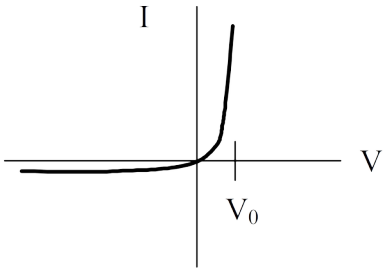

8. Plot I versus V (I on the y-axis). You can use Excel to plot. Does the plot show that the LED obey the Ohm Laws? Explain.

PART 3 - Light Bulb

Warning: if you are using the 0-24 V power supply <u>do not exceed</u> an output voltage of 12 volts.

A output voltage above 12V will most likely result in the explosion of the light bulb. Please don't.

Step 1. Set up the circuit show in Figure 1 where for R_D use the light bulb. Connect it to the power supply. Set V = 0 V.

Step 2. Make sure the 'green' meter is set to measure DC current on the range of 200m.

Step 3. Increase the voltage from 0 V to 12 V and take measurements of the voltage and the current each time. Record your data in the table below.

Note: the light bulb does not need to shine for you to take the measurements at low voltages and current. Calculate the resistance of the light bulb using $R = V/I$ for each row.

Analysis

9. Collect your data in the table below.

V_{SP}	V (volts)	I (ampere)	R (ohm)
1			
3			
5			
7			
8			
9			
10			
11			
12			

10. How are the values of the resistance related to the voltages across the light bulb?

11. Plot I versus V (I on the y-axis). You can use Excel to plot. Next, sketch below the I vs V plot to show your prediction of the values of the current I as if the voltage would reach values up to 50 V. Do no perform this experimentally.

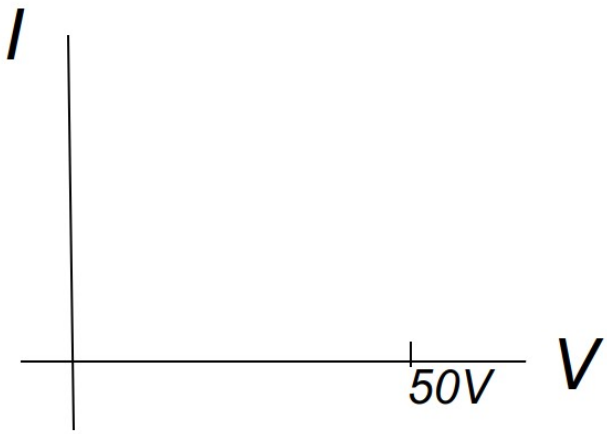

12. Does the plot show that the light bulbs obey the Ohm Laws? Explain

The resistance of tungsten filament of the light bulb varies nearly linearly with temperature as $R(T) = R_0\left[1+\alpha\left(T-T_0\right)\right]$ where T_0 = 293 K is the room temperature and α = 4.5 x 10^{-3} 1/K is the temperature coefficient of resistance.

13. Measure the resistance of the light bulb R_0 directly with the multimeter.

R_0 = _____ Ohm

14. Calculate the temperature of the tungsten filament when the light bulbs shines with 12 V across it

T = _____ K

15. Is the value of the temperature you obtained acceptable? Check online for the correct range of temperature values. For example you can google "kelvin color temperature scale".

TURN OFF THE TWO MULTIMETERS AND THE POWER SUPPLY